Transcriptome Discovery

ExactSTART™ Full-Length cDNA Library Cloning Kit*

Create a directionally cloned full-length cDNA library from as little as 1 µg of total RNA in only 2 days. The kit facilitates selective cloning of cDNA made from full-length polyadenylated RNA, permitting identification of the exact 5′ ends of RNA transcripts. Tags are added to 5′ and 3′ ends of the first-strand cDNA, providing priming sites for PCR amplification. The amplified dsDNA products can be used to generate templates for sequencing or to generate labeled target cDNA for microarray expression analysis. Alternatively, they can be cloned into the vector included in the kit for generating a full-length-selected cDNA library.

Cat. #	Quantity
ES0907	10 Reactions

**Covered by issued and/or pending patents; see www.EpiBio.com/legal*

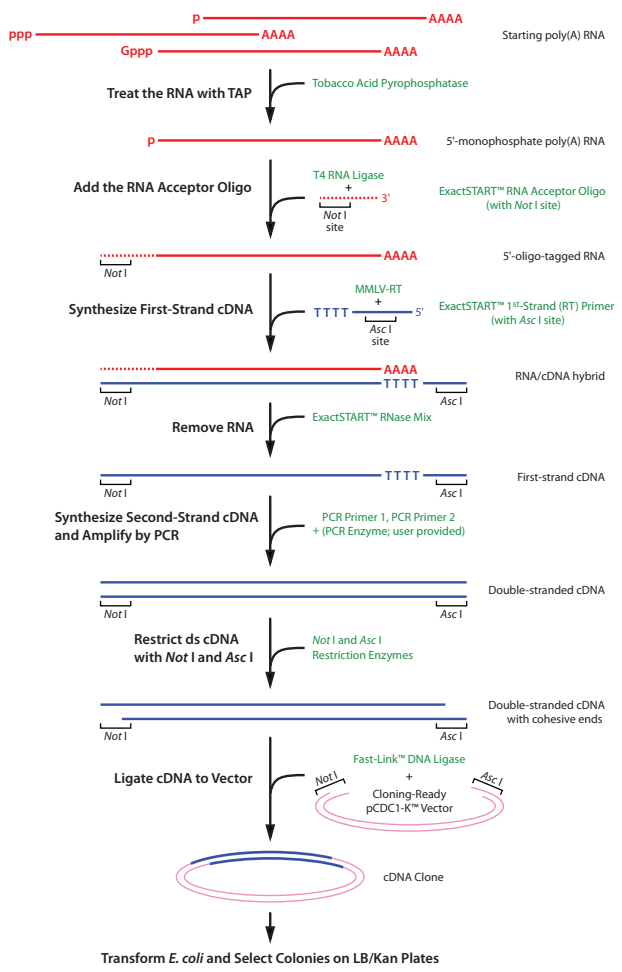

Figure 1. Schematic overview of the process for the ExactSTART™ Full-Length cDNA Library Cloning Kit. The simplified protocol can produce a library in as little as 2 days.

DNA & RNA Purification

QuickExtract™ RNA Extraction Kit

Rapidly extract RNA for RT-PCR (end-point or real-time) from cultured cells in minutes using a simple, one-tube protocol. Process one to hundreds of samples simultaneously without sample loss, toxic organic solvents, or spin columns. Simply add the QuickExtract RNA Extraction solution to the cell pellet and vortex for 1 minute. Your sample is now ready for RT-PCR. The kit works with adherent and suspension cells, including buccal cells, and has been tested on human, mouse, rat, *E. coli*, and *S. aureus* cells. An optional DNase I treatment (provided) may improve the performance of downstream applications.

Cat. #	Quantity
QER09015	5 ml (50 Extractions)
QER090150	50 ml (500 Extractions)

QuickExtract™ Seed DNA Extraction Solution

Rapidly extract PCR-ready genomic DNA from most ground or fragmented seed samples using a simple, one-tube protocol that takes only 8 minutes. Process one to hundreds of samples simultaneously, without centrifugation, spin columns, or use of any toxic organic solvents. Simply add the QuickExtract Seed Solution to the ground sample and perform two sequential heating steps. A small aliquot of the sample mix is then used as a template for PCR or qPCR. Most ground seed material under 10 mg is acceptable for DNA extraction, and the procedure is suitable for high-throughput or automated workflows.

Cat. #	Quantity
QES08095T	5 ml (50 Extractions)
QES080950	50 ml (500 Extractions)

End-Point PCR

PlantAmp™ PCR System

PCR amplification of genomic DNA from plants such as sunflower and cotton is challenging due to the presence of inhibitory compounds. The presence of polyphenols also makes it difficult to detect DNA of spoilage bacteria in wine samples. The PlantAmp™ PCR System is formulated to optimize PCR amplification from samples containing polyphenols and other plant-derived PCR inhibitors, as well as GC-rich templates. The PlantAmp PCR Enzyme Mix is an enzyme blend that includes 3′→5′ proofreading activity for high PCR fidelity. The PlantAmp 2X PCR PreMix includes all four dNTPs and $MgCl_2$.

Cat. #	Quantity
PA0809100	100 Units
PA08091K	1,000 Units

Enzymes for Molecular Biology

Thermostable RNA Ligase

Our new Thermostable RNA Ligase is an ATP-dependent ligase that catalyzes the intra- and intermolecular ligation of single-stranded RNA (ssRNA) molecules having a 5′-phosphate and a 3′-hydroxyl end. The ligase can be used for multiple applications, including ssRNA circularization, RNA-Ligase–Mediated Rapid Amplification of cDNA Ends (RLM-RACE), ligation of ssRNA and adaptors to ssRNA or ssDNA, and 5′-ligation-tagging of RNA molecules. The enzyme has optimal activity at 60°C, and depending on the RNA sequence, can efficiently ligate as little as 10 pmol of RNA. Thermostable RNA Ligase is provided in a 1,000-Unit size at a concentration of 100 U/µl. A 10X Reaction Buffer and a 1-mM ATP Solution are included.

Cat. #	Quantity
TRL8101K	1,000 Units

CircLigase™ II ssDNA Ligase

CircLigase II ssDNA Ligase is a thermostable enzyme that catalyzes circularization of single-stranded DNA templates (ssDNA) having a 5′-phosphate and a 3′-hydroxyl end. Unlike T4 DNA Ligase, which ligates DNA ends that are annealed adjacent to each other on a complementary DNA sequence, CircLigase II enzyme ligates ssDNA ends in the absence of a complementary sequence. Therefore, the enzyme is useful for making circular ssDNA molecules from linear ssDNA templates.

CircLigase II ssDNA Ligase efficiently circularizes ssDNA of >15 bases (including cDNAs) without T4 DNA Ligase, oligo "splints" or "bridges." The reaction produces virtually no linear or circular concatamers, and the circular DNA can be used for next-generation sequencing or rolling-circle replication and transcription experiments. The standard CircLigase II reaction uses 10 pmol of linear ssDNA, and does not require magnesium. CircLigase II enzyme has optimal activity at 60°C, and the circularization reaction can be completed in 60 minutes. The product includes a ssDNA Control Oligo (a linear 5′-phosphorylated 55-mer oligonucleotide) to monitor circularization efficiency.

Cat. #	Quantity
CL9021K	1,000 Units
CL9025K	5,000 Units

Do You Use EPICENTRE Products in Your Research?

If So, We'd Love To Hear from You!

In Print...

Contribute a feature article (approximately 1,500 words) to the *Forum* newsletter, and if we publish it, you will receive your choice of an honorarium of $500 towards the purchase of EPICENTRE products, or an Apple® iPod®. The article can be original or based on something that you have published previously. It should mention the EPICENTRE product(s) that you use in your applications, but the focus should be on your research. You will receive a copy for your review and approval before we publish the final version.

Online...

Contribute an *Application Note* to our website, and if we publish it, you will receive your choice of an honorarium of $100 towards the purchase of EPICENTRE products, or a VISA® Gift Card worth $25. *Application Notes* are brief descriptions (approximately 500 words) of how you use EPICENTRE products in your research.

For more information on article submission, please visit:
www.EpiBio.com/forum.asp